Acta Cryst. (1982). B**38**, 766–770

Structure of Lead Phthalocyanine* (Triclinic Form)

By Yasushi Iyechika, Kyuya Yakushi, Isao Ikemoto and Haruo Kuroda

Department of Chemistry, Faculty of Science, The University of Tokyo, Bunkyo-ku, Hongo, Tokyo 113, *Japan*

(*Received* 15 *June* 1981; *accepted* 16 *September* 1981)

Abstract

The crystal structure of the triclinic form of lead phthalocyanine has been determined. The crystal data are: $C_{32}H_{16}N_8Pb$, $M_r = 719{\cdot}7$, $P\bar{1}$, $a = 13{\cdot}123$ (7), $b = 16{\cdot}131$ (6), $c = 12{\cdot}889$ (5) Å, $\alpha = 94{\cdot}22$ (4), $\beta = 96{\cdot}20$ (4), $\gamma = 114{\cdot}19$ (2)°, $Z = 4$, $D_c = 1{\cdot}95$, D_m(flotation) $= 1{\cdot}93$ g cm^{-3}, μ(Mo $K\alpha$) $= 68{\cdot}3$ cm^{-1}. The final R value is 0·059 for 7683 reflections. Two independent molecular columns exist in this crystal, but they have almost equivalent structures. The molecules are considerably distorted from C_{4v} symmetry. The central Pb atom significantly deviates from the convex side of the phthalocyanine skeleton, and this deviation is larger than that in the monoclinic form of lead phthalocyanine. Molecules are stacked along the a axis and oriented so that their convex sides alternate. They are considerably inclined with respect to the stacking axis.

Introduction

The solid-state properties of metal phthalocyanines have long been studied, especially in connection with semiconductive behavior. In fact, most metal phthalocyanines are known to be organic semiconductors of relatively low electrical conductivity. However, Ukei reported that the monoclinic form of lead phthalocyanine showed behavior characteristic of a one-dimensional conductor (Ukei, 1973, 1975*a*,*b* 1976). He also showed, by X-ray crystal structure analysis of the monoclinic crystal, that lead phthalocyanine molecules are arranged in a closely packed molecular column in which Pb atoms form a one-dimensional chain with a relatively short interatomic distance (Ukei, 1973).

There exists another crystal form of lead phthalocyanine, the triclinic form. Herafter lead phthalocyanine is denoted PbPc, the monoclinic and triclinic forms being PbPc(M) and PbPc(T), respectively.

The electrical conductivity is very much lower in PbPc(T): The room-temperature conductivity of PbPc(T) is only about 10^{-10} Sm^{-1} (Yasunaga, Kojima, Yohda & Takeya, 1974) while that of PbPc(M) is about 10^{-2} Sm^{-1} (Ukei, 1975*b*). We have investigated the near-infrared and visible reflectance spectra of the two crystal forms and found a significant difference between them. These differences in the physical properties of PbPc(M) and PbPc(T) must be related to the difference in crystal structure. We therefore carried out the crystal structure analysis of PbPc(T).

Experimental

PbPc was synthesized according to the method reported by Kroenke & Kenney (1964), and was purified by repeated sublimations *in vacuo*. Single crystals were grown by sublimation by the following method: PbPc powder was heated to about 723 K to sublime in a nitrogen-gas flow at low pressure (0·7–0·9 kPa); the nitrogen carrier gas transported PbPc vapor to a glass tube having a controlled temperature gradient and single crystals of PbPc(T) grew at the portion kept at about 593 K and those of PbPc(M) at the portion kept at about 523 K. PbPc(T) crystals thus obtained were thin plates having (001) as the developed crystal face, whereas PbPc(M) crystals were needle-like.

A PbPc(T) crystal that gave Weissenberg photographs of satisfactory quality was selected from the prepared crystals and used for data collection, the dimensions of the crystal being 0·60 × 0·20 × 0·08 mm. The unit-cell dimensions and reflection intensities were measured with a Rigaku four-circle automatic diffractometer employing Mo $K\alpha$ radiation monochromatized with graphite. We obtained 7683 independent reflections with $|F_o| > 3\sigma(F_o)$ in the range $4° < 2\theta < 55°$. Absorption was corrected by use of the program *ACACA* written by C. T. Prewitt.

Structure determination and refinement

We assumed the space group to be $P\bar{1}$. The positions of the Pb atoms were found from the Patterson map, and approximate positions of the other atoms, except for H, were found from the Fourier map obtained by use of the heavy-atom procedure.

* Phthalocyaninatolead(II).

0567-7408/82/030766-05$01.00 © 1982 International Union of Crystallography

The structure was refined by block-diagonal least-squares calculations with anisotropic temperature factors, neglecting H atoms. The final R value was 0·059. The value of $[\sum w(|F_o| - |F_c|)^2/(n-m)]^{1/2}$ was 0·904 with the weighting scheme $w = [\sigma^2(F_o) + (0{\cdot}003F_o)^2]^{1/2}$, where n and m are the numbers of reflections and of parameters, respectively. The structure thus obtained was also refined by assuming the space group $P1$, but the final parameters agreed with those obtained under the assumption of the space group

Table 1. *Atomic coordinates* ($\times 10^4$) *and equivalent isotropic thermal parameters*, $B_{eq} = 4[V^2.\det(\beta_{ij})]^{1/3}$

Molecule 1

	x	y	z	B_{eq} (Å^2)
Pb	2336·1 (0·4)	3891·6 (0·3)	199·8 (0·4)	2·615 (12)
16-membered ring				
Isoindole nitrogens				
N(1)	3082 (8)	5199 (6)	−677 (8)	2·9 (3)
N(2)	774 (8)	4194 (6)	−483 (9)	3·2 (3)
N(3)	1392 (8)	4027 (6)	1617 (9)	3·2 (3)
N(4)	3691 (8)	5076 (6)	1439 (7)	2·7 (3)
Aza nitrogens				
N(5)	1480 (9)	4818 (7)	−2054 (8)	3·5 (3)
N(6)	−512 (8)	3518 (7)	734 (9)	3·2 (3)
N(7)	2975 (9)	4601 (7)	3049 (8)	3·1 (4)
N(8)	4970 (7)	5947 (6)	303 (8)	2·5 (3)
Carbons				
C(1)	4209 (9)	5740 (7)	−546 (10)	2·6 (3)
C(2)	2559 (11)	5205 (8)	−1656 (9)	2·9 (4)
C(3)	671 (9)	4409 (7)	−1488 (9)	2·6 (3)
C(4)	−266 (10)	3781 (7)	−187 (11)	2·7 (4)
C(5)	251 (10)	3672 (7)	1574 (10)	2·7 (4)
C(6)	1852 (10)	4176 (8)	2654 (10)	2·9 (4)
C(7)	3765 (10)	5026 (8)	2483 (9)	2·8 (4)
C(8)	4716 (9)	5670 (7)	1198 (9)	2·5 (4)
Benzene rings				
I				
C(9)	4456 (11)	6108 (8)	−1549 (10)	3·0 (4)
C(10)	3421 (10)	5751 (8)	−2245 (10)	3·0 (5)
C(11)	3363 (12)	5925 (9)	−3285 (11)	3·7 (6)
C(12)	4385 (12)	6485 (9)	−3615 (11)	3·7 (4)
C(13)	5414 (13)	6857 (8)	−2920 (11)	3·7 (5)
C(14)	5473 (12)	6677 (8)	−1884 (11)	3·6 (5)
II				
C(15)	−526 (10)	4068 (8)	−1900 (11)	3·1 (3)
C(16)	−1112 (9)	3674 (8)	−1088 (11)	3·0 (4)
C(17)	−2284 (11)	3291 (9)	−1203 (13)	4·1 (5)
C(18)	−2868 (12)	3284 (10)	−2188 (14)	4·8 (5)
C(19)	−2273 (13)	3667 (9)	−3023 (13)	4·4 (5)
C(20)	−1074 (12)	4111 (9)	−2859 (13)	4·2 (5)
III				
C(21)	−30 (10)	3537 (7)	2634 (10)	2·8 (4)
C(22)	1003 (11)	3869 (8)	3311 (11)	3·5 (5)
C(23)	1051 (13)	3904 (9)	4403 (11)	3·8 (6)
C(24)	−9 (13)	3572 (9)	4787 (13)	4·1 (6)
C(25)	−985 (15)	3268 (10)	4124 (14)	4·9 (6)
C(26)	−1063 (13)	3246 (9)	3016 (12)	4·2 (5)
IV				
C(27)	4912 (10)	5616 (7)	2983 (9)	2·8 (3)
C(28)	5534 (10)	5989 (7)	2191 (9)	2·8 (4)
C(29)	6671 (11)	6590 (8)	2420 (11)	3·5 (4)
C(30)	7182 (12)	6757 (9)	3475 (12)	4·2 (4)
C(31)	6551 (12)	6394 (10)	4264 (12)	4·5 (5)
C(32)	5409 (12)	5815 (9)	4056 (12)	3·9 (5)

Molecule 2

	x	y	z	B_{eq} (Å^2)
Pb	8543·9 (0·4)	1058·7 (0·3)	596·7 (0·4)	2·507 (13)
16-membered ring				
Isoindole nitrogens				
N(1)	7885 (9)	−216 (6)	−729 (8)	3·0 (3)
N(2)	6694 (8)	779 (6)	−156 (8)	2·6 (4)
N(3)	7456 (8)	828 (6)	1953 (8)	2·8 (3)
N(4)	8679 (8)	−178 (6)	1388 (8)	2·7 (4)
Aza nitrogens				
N(5)	6719 (8)	262 (6)	−1960 (8)	2·9 (3)
N(6)	6049 (8)	1344 (6)	1303 (8)	2·8 (3)
N(7)	8468 (8)	252 (7)	3168 (8)	3·1 (3)
N(8)	8965 (8)	−1029 (6)	−82 (8)	3·0 (3)
Carbons				
C(1)	8443 (10)	−775 (8)	−845 (10)	2·8 (4)
C(2)	7413 (9)	−175 (8)	−1718 (9)	2·7 (4)
C(3)	6378 (9)	648 (7)	−1225 (10)	2·6 (3)
C(4)	6056 (9)	1171 (8)	294 (9)	2·6 (4)
C(5)	6630 (10)	1134 (7)	2063 (10)	2·7 (4)
C(6)	7776 (10)	650 (7)	2941 (10)	3·0 (3)
C(7)	8826 (10)	−176 (7)	2450 (10)	2·9 (3)
C(8)	9022 (10)	−789 (7)	929 (10)	2·9 (4)
Benzene rings				
I				
C(9)	8332 (9)	−1099 (8)	−1953 (10)	2·8 (3)
C(10)	7664 (10)	−709 (8)	−2501 (10)	2·9 (3)
C(11)	7400 (10)	−874 (8)	−3599 (10)	3·1 (3)
C(12)	7802 (11)	−1414 (8)	−4155 (10)	3·4 (4)
C(13)	8467 (11)	−1803 (8)	−3574 (11)	3·3 (4)
C(14)	8698 (10)	−1671 (8)	−2515 (10)	3·0 (4)
II				
C(15)	5506 (10)	1004 (7)	−1490 (11)	3·0 (4)
C(16)	5308 (9)	1304 (7)	−519 (10)	2·7 (4)
C(17)	4517 (11)	1659 (8)	−454 (12)	3·3 (5)
C(18)	3925 (11)	1705 (9)	−1433 (12)	3·7 (5)
C(19)	4135 (12)	1407 (9)	−2381 (12)	4·0 (6)
C(20)	4945 (11)	1024 (8)	−2428 (11)	3·4 (4)
III				
C(21)	6482 (10)	1208 (7)	3146 (10)	2·9 (4)
C(22)	7207 (11)	907 (8)	3716 (10)	3·1 (4)
C(23)	7250 (11)	843 (9)	4793 (11)	3·6 (4)
C(24)	6562 (12)	1160 (10)	5319 (12)	4·2 (6)
C(25)	5787 (13)	1424 (11)	4739 (12)	4·4 (6)
C(26)	5733 (12)	1452 (9)	3678 (11)	3·6 (4)
IV				
C(27)	9346 (10)	−764 (7)	2723 (10)	3·0 (3)
C(28)	9471 (10)	−1163 (8)	1743 (11)	3·3 (4)
C(29)	9970 (11)	−1795 (8)	1758 (11)	3·3 (4)
C(30)	10299 (10)	−2006 (8)	2709 (11)	3·3 (5)
C(31)	10170 (11)	−1608 (8)	3691 (11)	3·6 (4)
C(32)	9683 (11)	−973 (8)	3692 (11)	3·8 (4)

$P\bar{1}$ within the estimated standard deviations. Thus we adopted the $P\bar{1}$ model. Atomic scattering factors for Pb^{2+}, C and N were taken from *International Tables for X-ray Crystallography* (1962, 1974). The anomalous dispersion was corrected for Pb^{2+}. The final atomic parameters are listed in Table 1.*

Results and discussion

Arrangement of molecules

A projection of the crystal structure of PbPc(T) is illustrated in Fig. 1. The PbPc molecule is not planar: The central Pb atom is significantly out of the convex molecular plane containing the C and N atoms. We refer to this side of the molecule as the convex side and the other as the concave side. PbPc molecules stack along the a axis orienting their convex and concave sides alternately. Thus there are two types of molecular overlap between neighboring molecules, one being the 'convex type' where two molecules are mutually facing their convex sides, the other being the 'concave type' where molecules are facing their concave sides. There are two crystallographically independent molecular columns in the PbPc(T) crystal. The molecular arrangement within each column, however, is almost the same for these two columns, and the one can be converted into the other by rotating it anticlockwise by 165° around the stacking axis.

* Lists of structure factors, anisotropic thermal parameters and bond lengths and angles of each molecule have been deposited with the British Library Lending Division as Supplementary Publication No. SUP 36401 (57 pp.). Copies may be obtained through The Executive Secretary, International Union of Crystallography, 5 Abbey Square, Chester CH1 2HU, England.

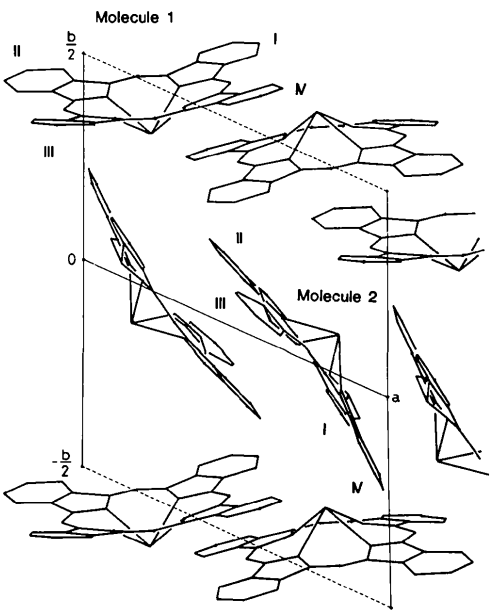

Fig. 1. Projection of the crystal structure of PbPc(T) onto the (001) plane.

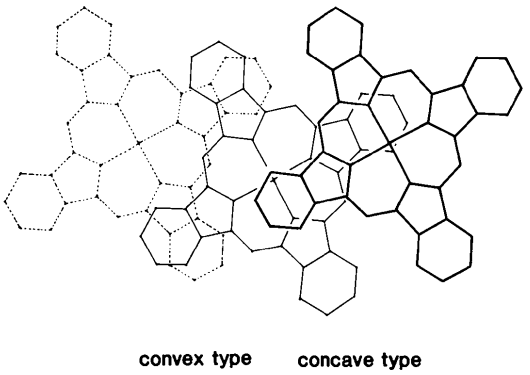

Fig. 2. The overlap of neighboring molecules in the column.

The PbPc molecules are considerably inclined with respect to the stacking axis. If we take a plane defined by the four isoindole N atoms, this plane is inclined at 59·9° with respect to the plane perpendicular to the stacking axis, and, for molecule 1, has the equation $-0{\cdot}503X + 0{\cdot}950Y + 0{\cdot}230Z = 5{\cdot}755$.

Fig. 2 shows the molecular overlap seen from the direction normal to this plane. In a convex-type pair, two molecules mutually overlap only at the region of two benzene rings. Slightly more overlap is found in a concave-type pair, where a pyrrole ring and a benzene ring of a molecule overlap the central 16-membered ring of the other molecule. In both cases, the Pb atoms are far from each other, the average values of the Pb—Pb distances being 6·42 and 8·33 Å in the convex- and concave-type pairs, respectively.

These features are in strong contrast to the column structure of PbPc(M), where molecules are closely packed together with the same orientation and are exactly overlapping. In the molecular column of PbPc(M), there exists a one-dimensional chain of Pb atoms with interatomic distance 3·73 Å. The above-mentioned differences in molecular arrangement between PbPc(T) and PbPc(M) probably explain the large difference in electrical conductivity.

Molecular geometry

Although molecules 1 and 2 in Fig. 1 are crystallographically independent, their molecular geometries are almost the same. The bond distances and bond angles, averaged over these two molecules, are given in Fig. 3, and the deviations of atoms from the plane defined by the four isoindole N atoms are given in Fig. 4. The molecular geometry viewed from the direction parallel to the above-mentioned plane is illustrated in Fig. 5. The angle of inclination with respect to the above-mentioned plane is different for each of the four peripheral benzene rings (I, II, III and IV in Fig. 3),

Table 2. *Averaged bond lengths* (Å)

		Triclinic form[1]			Monoclinic form[2]
		Molecule 1	Molecule 2	Ave.	
Pb–N		2·36	2·36	2·36	2·21
16-membered ring	Isoindole N–C	1·37	1·38	1·37	1·37
	Aza N–C	1·33	1·33	1·33	1·35
	C–C	1·46	1·45	1·45	1·49
Benzene rings	I	1·40	1·40	1·40	1·41
	II	1·41	1·40		
	III	1·40	1·40		
	IV	1·40	1·41		

References: (1) This work. (2) Ukei (1973).

being 5·3, 8·3, 13·4 and 11·3° for I, II, III and IV, respectively. Thus the molecular geometry of the PbPc molecule in PbPc(T) deviates from the C_{4v} symmetry expected for a free PbPc molecule. This deviation probably arises from the intermolecular interaction in the crystal. However, if we look at only bond distances, the deviation from C_{4v} symmetry is almost negligible. Therefore, we averaged the bond distances obtained for each kind of bond under the assumption of C_{4v} symmetry. The results are given in Table 2 together with the corresponding values reported for PbPc(M). A significant difference between PbPc(T) and PbPc(M) is found in only the Pb–N bond length: it is longer by about 0·15 Å in PbPc(T) than in PbPc(M). The deviations of the Pb atom from the plane defined by the four isoindole N atoms are 1·28 and 0·91 Å in PbPc(T) and PbPc(M), respectively. Presumably the Pb–N bond length in PbPc(T) is closer to that of a free PbPc molecule, and the Pb–N bond length in PbPc(M) is a little shortened by a relatively strong intermolecular interaction within the closely packed molecular column.

The computers used were HITAC 8700/8800 and HITAC M-200H at the Computer Centre, University of Tokyo. The *UNICS* (1967) program system was used.

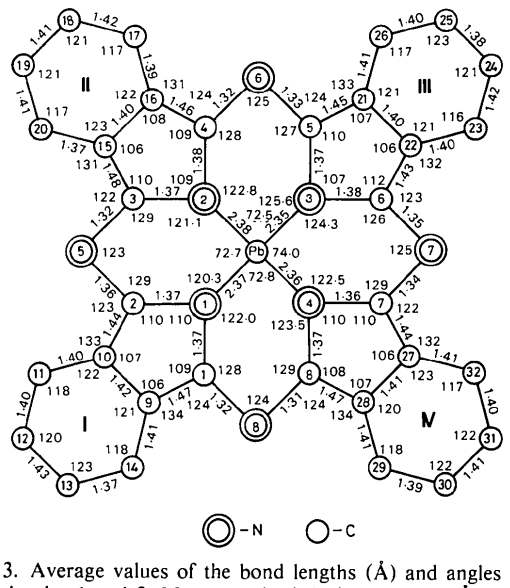

Fig. 3. Average values of the bond lengths (Å) and angles (°) in molecules 1 and 2. Mean standard deviations: 0·02 Å for N–C and C–C bond lengths, 0·014 Å for Pb–N bond lengths, 0·4° for N–Pb–N bond angles, 0·9° for Pb–N–C bond angles, 1·4° for all the other bond angles.

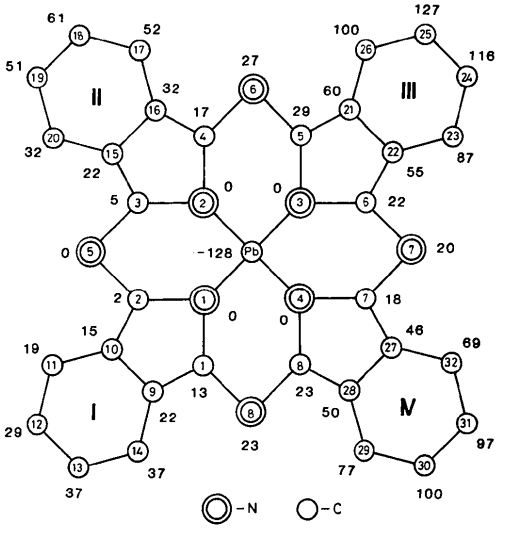

Fig. 4. Deviations of atoms from the plane defined by the four isoindole N atoms in molecule 2 ($\times 10^2$ Å). Mean standard deviation is 0·01 Å.

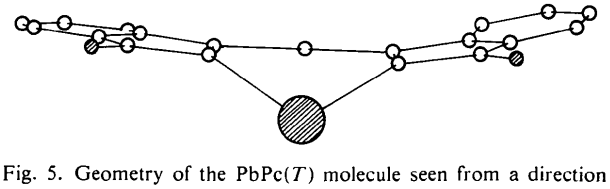

Fig. 5. Geometry of the PbPc(T) molecule seen from a direction parallel to the plane defined by the four isoindole N atoms.

The authors wish to thank Professor Hitoshi Yasunaga, University of Electro-Communication, for his kind permission to use the apparatus for the vapor-phase crystal growth. Their thanks are also due to Dr Kazutoshi Ukei, Tohoku University, for his kind advice and discussion.

References

International Tables for X-ray Crystallography (1962). Vol. III. Birmingham: Kynoch Press.

International Tables for X-ray Crystallography (1974). Vol. IV. Birmingham: Kynoch Press.

KROENKE, W. J. & KENNEY, M. E. (1964). *Inorg. Chem.* **3**, 251–254.

UKEI, K. (1973). *Acta Cryst.* B**29**, 2290–2292.

UKEI, K. (1975*a*). *Phys. Lett. A*, **55**, 111–112.

UKEI, K. (1975*b*). Thesis, Univ. of Tokyo.

UKEI, K. (1976). *J. Phys. Soc. Jpn*, **40**, 140–143.

UNICS (1967). *The Universal Crystallographic Computation System*, edited by T. SAKURAI. The Crystallographic Society of Japan.

YASUNAGA, H., KOJIMA, K., YOHDA, H. & TAKEYA, K. (1974). *J. Phys. Soc. Jpn*, **37**, 1024–1030.

Acta Cryst. (1982). B**38**, 770–773

The Structure of Diaquamalonatozinc(II)

BY NOEL J. RAY*

Department of Dental Prosthetics (Materials Science), Cork Dental School & Hospital, Cork, Ireland

AND BRIAN J. HATHAWAY

Department of Chemistry, University College, Cork, Ireland

(*Received* 9 *June* 1981; *accepted* 21 *September* 1981)

Abstract

$C_3H_6O_6Zn$ is monoclinic, space group $C2/m$, with a = 12·58 (5), b = 7·41 (5), c = 7·23 (5) Å, β = 119·0 (5)°, U = 589 Å^3, Z = 4, d_m = 2·31 (2), d_c = 2·29 Mg m^{-3}, $F(000)$ = 408, μ(Cu $K\alpha$) = 5·295 mm^{-1}. The structure was solved by the heavy-atom technique, with visually estimated integrated Weissenberg data. The final R = 0·0849 for 474 reflections. The structure comprises non-equivalent zinc ions at (0,0,0) and $(0,\frac{1}{2},\frac{1}{2})$, site symmetry $2/m$, bridged by a carboxylate group. A water molecule is coordinated to each metal ion, and the central C of the malonate ion lies on the mirror plane. The structure develops as a sheet-type polymer parallel to (100) generating near-axial, but different, octahedral zinc environments (approximately D_{4h}), with a water molecule symmetrically H-bonded to two mirror-related carboxylate O atoms on adjacent sheets. A second symmetrical bifurcated H-bond occurs within the polymer sheets.

Introduction

The physical properties of certain dental cements can be significantly altered by the addition of suitable polydentate ligands. Examples include the improvement of the manipulative and erosion characteristics of the glass ionomers through the addition of tartaric acid (Wilson, Crisp & Ferner, 1976), and the fortification of the ZnO/eugenol materials with 2-ethoxybenzoic acid (*o*-eba) (Brauer, 1965, 1967, 1972). The structures $[M(o\text{-eba})_2H_2O]$ (M = Zn, Ca) have been determined (Natarajan, Sake Gowda & Cartz, 1974); Ray & Hathaway, 1981) and are found to be seriously deficient in cohesion through the formation of limited polymeric networks.

This suggests that other ligands might be more effective in binding the metal centres, and particularly attractive in this respect are polyfunctional carboxylate systems less sterically constrained in their bridging potential than *o*-eba. The structure of diaquamalonatocalcium(II) (Karipides, Ault & Reed, 1977) involves a three-dimensional network of primary bonds linking the metal ions. A similar observation is reported for diaquasuccinatocalcium(II) monohydrate (Karipides & Reed, 1980). The present structure determination was undertaken to evaluate the binding of Zn^{2+} by the malonate ion as a potentially more attractive fortifying agent for the ZnO/eugenol cements.

Experimental

$[Zn(C_3H_2O_4)(H_2O)_2]$ was prepared as follows: malonic acid ($C_3H_2O_4$) (4·57 g, 4·4 × 10^{-2} mol) was dissolved

* To whom correspondence should be addressed.

0567-7408/82/030770-04$01.00

© 1982 International Union of Crystallography